MATHEMATICS · GRADES 7-9

Angles on a Straight Line

Difficulty level: Intermediate

Mathematics: Grades 7-9

This document was made by AI and there may be mistakes. If a question or answer looks wrong, use the Flag a mistake button to let Brett know so he can fix it.

Overview of the concept

This is how you work out a missing angle along a straight edge. The angles on either side of a door that is half open against a flat wall add up to a straight line, so one missing angle is just a subtraction away. It is one of the quickest angle facts there is, and it shows up in almost every angle problem.



Rule

Angles on a straight line: angles on a straight line add to 180 degrees.

If you know all but one of the angles on a straight line, subtract the ones you know from 180 to find the missing one.

© 2026 Brett Robbins. All Rights Reserved.

Worked examples

EXAMPLE 1

Q **Angles on a straight line are 35 degrees, 80 degrees, and an unknown. Find the unknown.**

SOLUTION

The angles sitting on one straight line come to 180 degrees in all.

Add the known angles: 35 + 80 = 115

Subtract: 180 - 115 = 65. The unknown is 65 degrees.

EXAMPLE 2

Q **Angles on a straight line are 75 degrees and an unknown. Find the unknown.**

SOLUTION

The angles sitting on one straight line come to 180 degrees in all.

Subtract: 180 - 75 = 105

The unknown is 105 degrees.

© 2026 Brett Robbins. All Rights Reserved.

Practice questions

1 **Three angles sit on a straight line in the diagram. Find the angle marked x.**

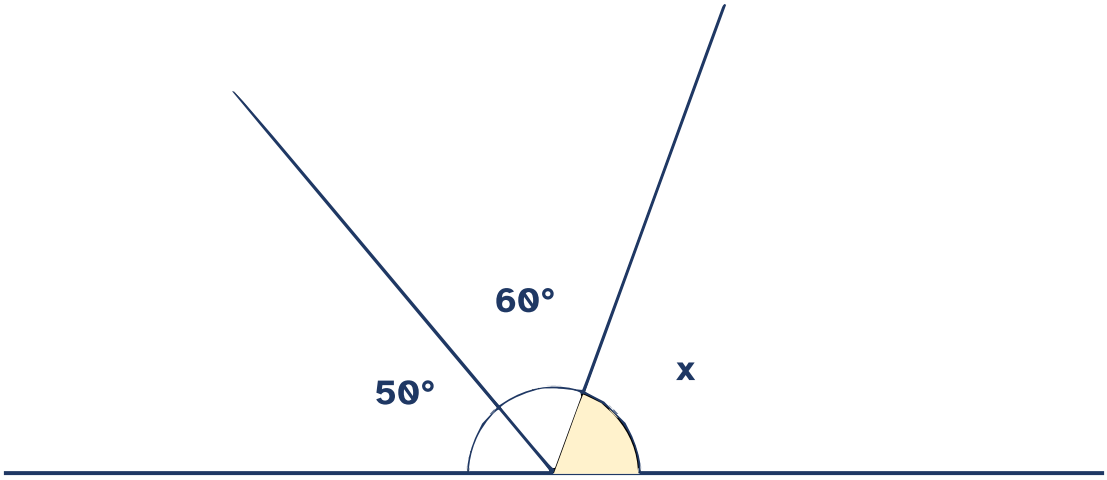

Understand It with Pulse

Flag a mistake

© 2026 Brett Robbins. All Rights Reserved.

2 A door opens on a straight hinge line. The diagram shows two angles on the line. Find the angle marked x.

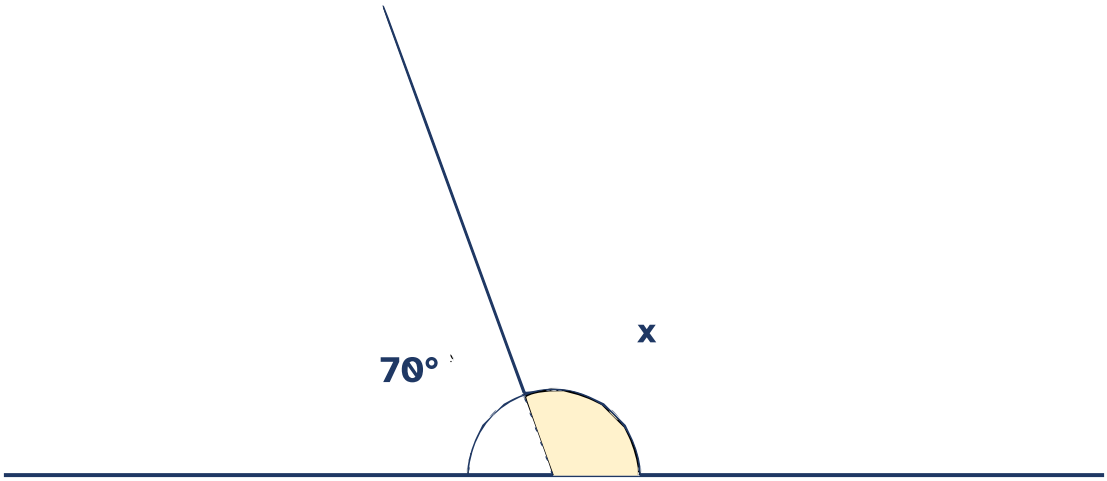

Understand It with Pulse | Flag a mistake

3 Two angles on a straight line are x and 2x. Find x.

Understand It with Pulse | Flag a mistake

© 2026 Brett Robbins. All Rights Reserved.

4 Three angles measure 100 degrees, 50 degrees and 30 degrees. Do they sit on a straight line? Answer yes or no.

A Yes

B No

Understand It with Pulse | Flag a mistake

5 An angle on a straight line is split into two equal angles. Each angle is x. Find x.

Understand It with Pulse | Flag a mistake

© 2026 Brett Robbins. All Rights Reserved.

6 **A straight line has angles 120 degrees and x. A second straight line has angles 60 degrees and y. Which is bigger, x or y?**

- A x
- B y
- C They are equal
- D You cannot tell

Understand It with Pulse | Flag a mistake

7 **One angle on a straight line is 15 degrees. The other angle is split into two equal parts. How big is each part, in degrees?**

Understand It with Pulse | Flag a mistake

© 2026 Brett Robbins. All Rights Reserved.

8 **A straight angle is 180 degrees. How many 30 degree angles fit on a straight line?**

Understand It with Pulse | Flag a mistake

9 **Three angles on a straight line are x, 2x and 45 degrees. Find x.**

Understand It with Pulse | Flag a mistake

© 2026 Brett Robbins. All Rights Reserved.

10 **Which of these sets of angles can sit on a straight line?**

A 30 degrees, 60 degrees, 90 degrees

B 40 degrees, 50 degrees, 60 degrees

C 90 degrees, 90 degrees, 90 degrees

D 20 degrees, 30 degrees, 40 degrees

Understand It with Pulse | Flag a mistake

© 2026 Brett Robbins. All Rights Reserved.

ANSWER KEY

1. 70 degrees

2. 110 degrees

3. 60 degrees

4. Yes

5. 90 degrees

6. y

7. 82.5 degrees

8. 6

9. 45 degrees

10. 30 degrees, 60 degrees, 90 degrees

© 2026 Brett Robbins. All Rights Reserved.