MATHEMATICS · GRADES 4-6

Area of composite shapes

Difficulty level: Intermediate

Mathematics: Grades 4-6

This document was made by AI and there may be mistakes. If a question or answer looks wrong, use the Flag a mistake button to let Brett know so he can fix it.

Overview of the concept

This is how you work out how much paint, flooring, or turf you need for a room or yard that is not one simple shape. You split the odd shape into pieces you already know how to measure, like rectangles and triangles, and add their areas together. It is the practical way to measure real rooms and gardens, because real rooms are almost never perfect rectangles.



Rule

Area of composite shapes: split the shape into pieces you already know, work out the area of each piece, and add them together.

The total area is the sum of the areas of the parts.

© 2026 Brett Robbins. All Rights Reserved.

Worked examples

EXAMPLE 1

Q An L shape is made from a 6 by 4 rectangle and a 2 by 3 rectangle. What is its area?

SOLUTION

Part A: $6 \times 4 = 24$

Part B: $2 \times 3 = 6$

Total: $24 + 6 = 30$ cm^2

Split the shape into two rectangles: one 6 by 4, one 2 by 3.

$6 \times 4 = 24$ cm^2
$2 \times 3 = 6$ cm^2

Add them: $24 + 6 = 30$ cm^2

EXAMPLE 2

Q A shape is made from a 5 by 5 square and a 5 by 2 rectangle. What is its area?

SOLUTION

Part A: $5 \times 5 = 25$

Part B: $5 \times 2 = 10$

Total: $25 + 10 = 35$ cm^2

Split the shape into a 5 by 5 square and a 5 by 2 rectangle.

$5 \times 5 = 25$ cm^2
$5 \times 2 = 10$ cm^2

Add them: $25 + 10 = 35$ cm^2

© 2026 Brett Robbins. All Rights Reserved.

Practice questions

1 What is the area of the shape in the picture?

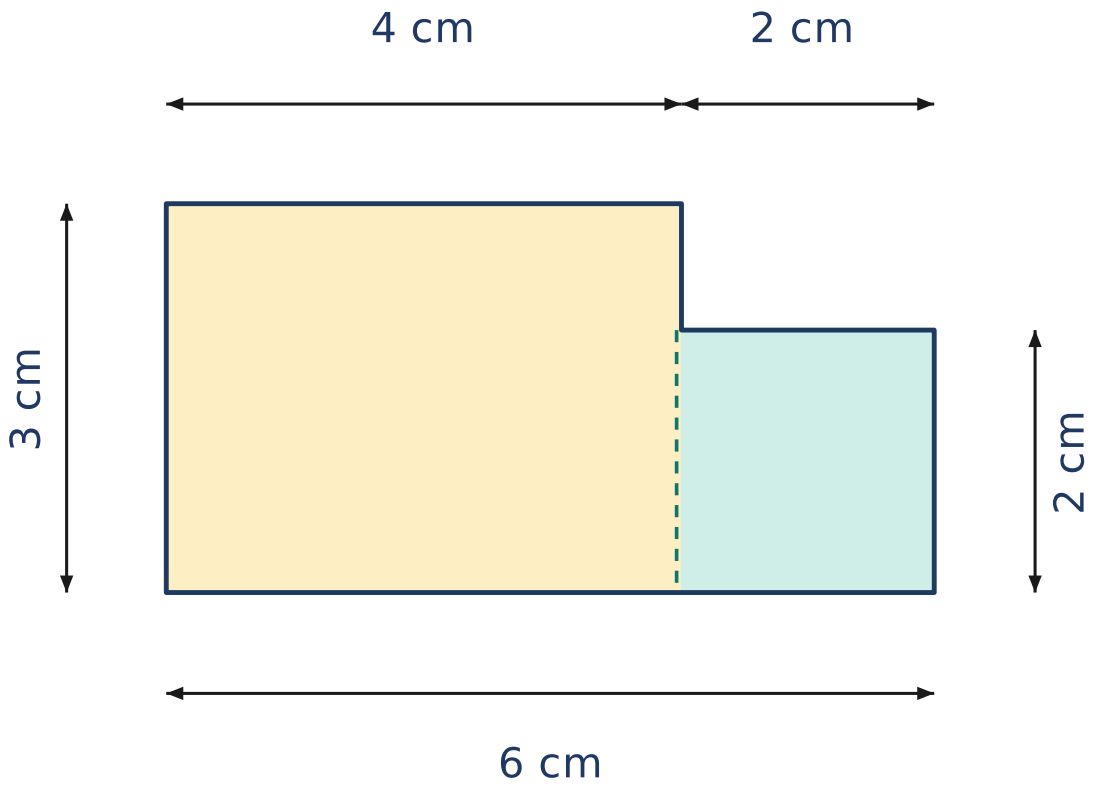

A $12\ cm^2$

B $14\ cm^2$

C $16\ cm^2$

D $18\ cm^2$

Understand It with Pulse | Flag a mistake

© 2026 Brett Robbins. All Rights Reserved.

2 A 9 cm by 6 cm rectangle has a 3 cm by 4 cm rectangle cut out of one corner. What is the area that is left?

- **A** 42 cm^2
- **B** 54 cm^2
- **C** 12 cm^2
- **D** 66 cm^2

Understand It with Pulse | Flag a mistake

3 A composite shape is made of two rectangles. One has area 16 cm^2. The total area is 41 cm^2. What is the area of the other rectangle?

- **A** 25 cm^2
- **B** 16 cm^2
- **C** 57 cm^2
- **D** 9 cm^2

Understand It with Pulse | Flag a mistake

© 2026 Brett Robbins. All Rights Reserved.

4 The shape in the picture is made of two rectangles. What is the area of the smaller rectangle?

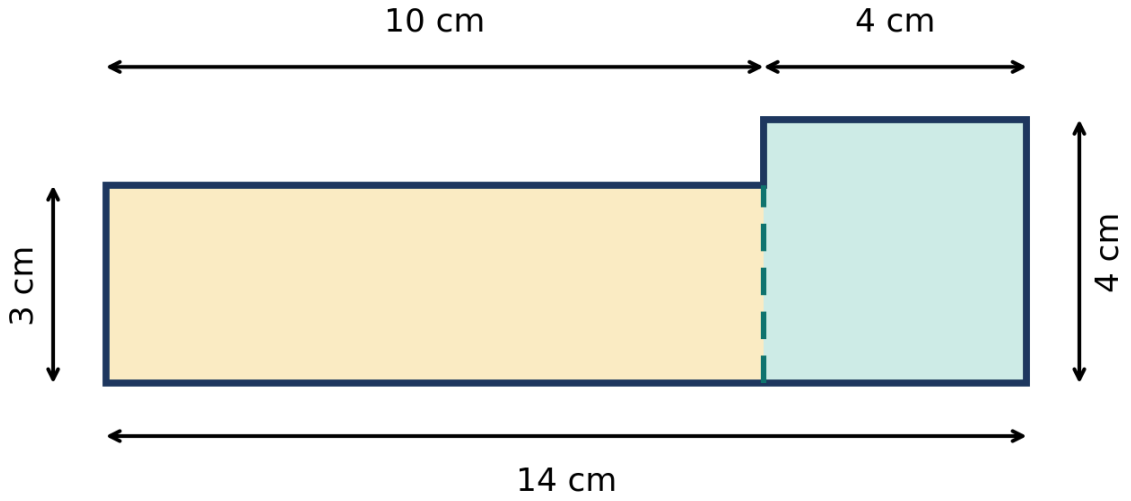

A 16 cm^2

B 30 cm^2

C 46 cm^2

D 14 cm^2

Understand It with Pulse

Flag a mistake

© 2026 Brett Robbins. All Rights Reserved.

5 What is the area of a 7 cm by 7 cm square joined to a 3 cm by 3 cm square?

- **A** 40 cm^2
- **B** 58 cm^2
- **C** 49 cm^2
- **D** 70 cm^2

Understand It with Pulse | Flag a mistake

© 2026 Brett Robbins. All Rights Reserved.

6 **What is the difference between the areas of the two rectangles in the picture?**

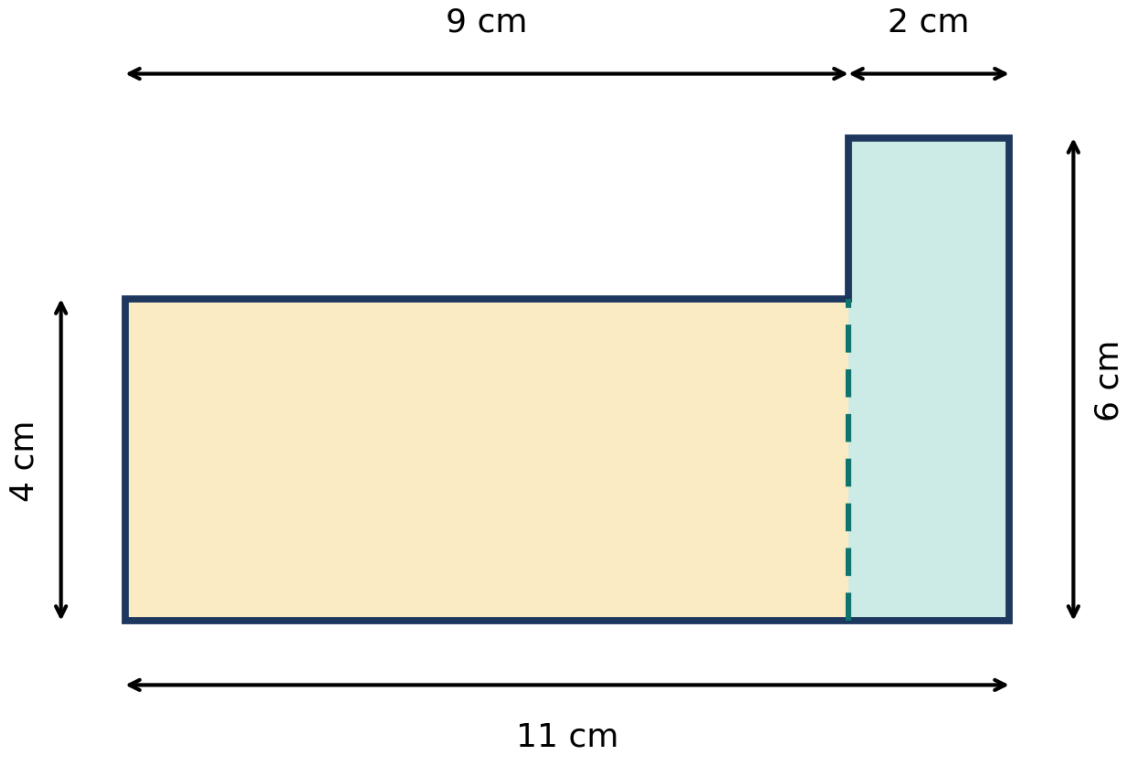

A 24 cm²

B 48 cm²

C 12 cm²

D 36 cm²

Understand It with Pulse | Flag a mistake

© 2026 Brett Robbins. All Rights Reserved.

7 What is the area of a 6 cm by 4 cm rectangle joined to a 3 cm by 3 cm square?

- **A** 33 cm^2
- **B** 24 cm^2
- **C** 27 cm^2
- **D** 42 cm^2

Understand It with Pulse | Flag a mistake

© 2026 Brett Robbins. All Rights Reserved.

8 **The shape in the picture is made of two rectangles. If the left rectangle is doubled in width, what is the new total area?**

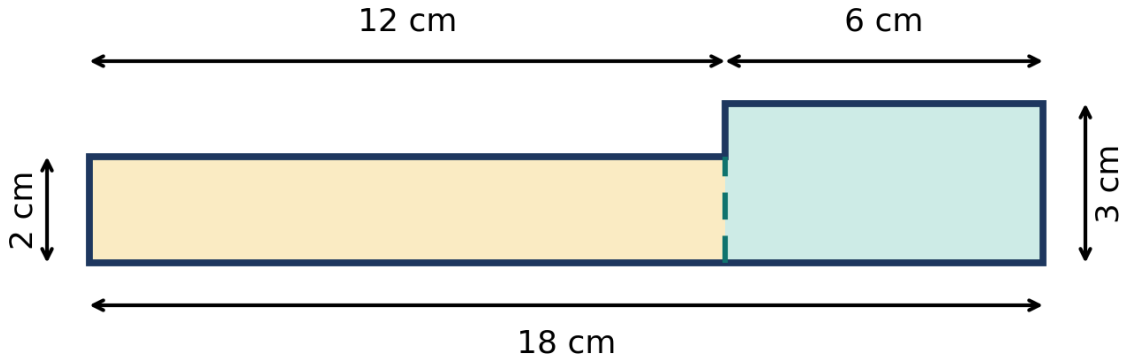

A 66 cm^2

B 42 cm^2

C 84 cm^2

D 48 cm^2

Understand It with Pulse | Flag a mistake

© 2026 Brett Robbins. All Rights Reserved.

9 What is the area of a shape made from a 5 cm by 5 cm square and a triangle with base 4 cm and height 6 cm?

- A 37 cm²
- B 25 cm²
- C 49 cm²
- D 12 cm²

Understand It with Pulse | Flag a mistake

10 A composite shape has total area 36 cm² and is made of two equal rectangles. What is the area of one rectangle?

- A 18 cm²
- B 36 cm²
- C 72 cm²
- D 9 cm²

Understand It with Pulse | Flag a mistake

© 2026 Brett Robbins. All Rights Reserved.

ANSWER KEY

1. 16 cm^2

2. 42 cm^2

3. 25 cm^2

4. 16 cm^2

5. 58 cm^2

6. 24 cm^2

7. 33 cm^2

8. 66 cm^2

9. 37 cm^2

10. 18 cm^2

© 2026 Brett Robbins. All Rights Reserved.