MATHEMATICS · GRADES 7-9

Surface Area of Prisms

Difficulty level: Intermediate

Mathematics: Grades 7-9

This document was made by AI and there may be mistakes. If a question or answer looks wrong, use the Flag a mistake button to let Brett know so he can fix it.

Overview of the concept

This is how you work out how much material you need to cover a box-shaped object, like wrapping a present or painting a bookshelf, by adding up all of its flat faces. A prism is made of flat faces, and opposite faces match, so you can work out each pair once and add them up. The total is the amount of paper, paint, or wood veneer you need to cover the whole thing. That is how you avoid buying too little and running short halfway through the job, or buying far too much.



Rule

Surface area: the surface area of an object is the total area of all its outside faces added together.

Count every face, including the ones you cannot see, and add them up.

© 2026 Brett Robbins. All Rights Reserved.

Worked examples

EXAMPLE 1

Q Find the surface area of a rectangular prism 5 cm by 4 cm by 3 cm

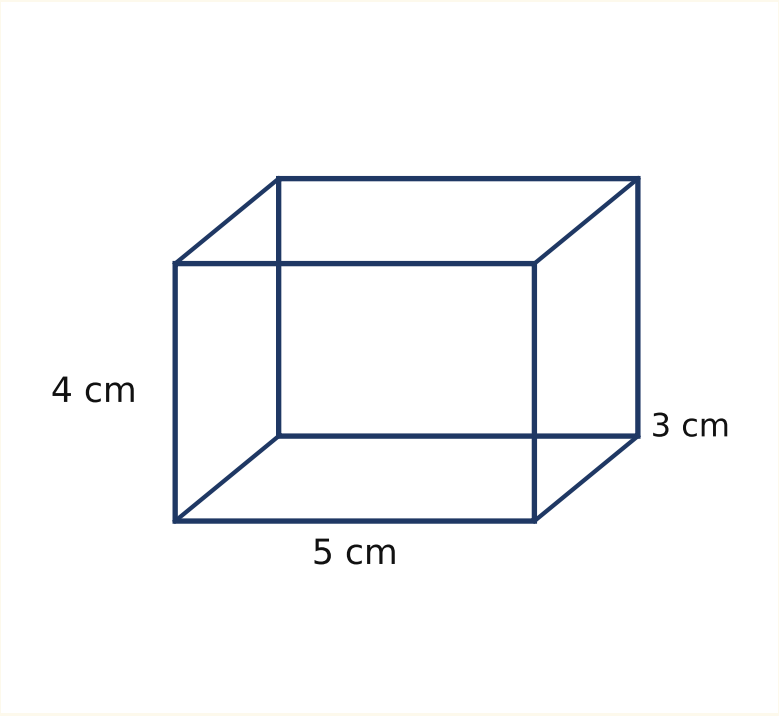

SOLUTION

Area of each pair: front and back $2 \times (5 \times 4) = 40$; top and bottom $2 \times (5 \times 3) = 30$; sides $2 \times (4 \times 3) = 24$

Add: $40 + 30 + 24 = 94$

The surface area is 94 cm^2.

© 2026 Brett Robbins. All Rights Reserved.

EXAMPLE 2

Q Find the surface area of a cube of side 6 cm

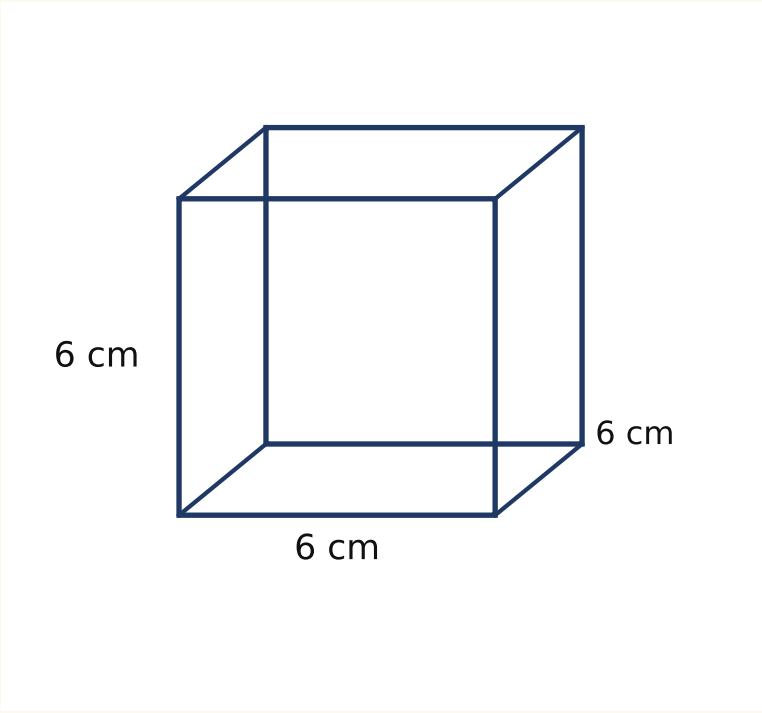

SOLUTION

One face: $6 \times 6 = 36$ cm^2

A cube has 6 faces: $6 \times 36 = 216$

The surface area is 216 cm^2.

© 2026 Brett Robbins. All Rights Reserved.

Practice questions

1 A gift box is a cube of side 4 cm. Find its surface area.

- **A** 96 square cm
- **B** 54 square cm
- **C** 108 square cm
- **D** 150 square cm

Understand It with Pulse | Flag a mistake

2 A shoe box is a rectangular prism 6 cm by 4 cm by 3 cm. Find its surface area.

- **A** 94 square cm
- **B** 108 square cm
- **C** 120 square cm
- **D** 52 square cm

Understand It with Pulse | Flag a mistake

© 2026 Brett Robbins. All Rights Reserved.

3 A dice is a cube of side 3 cm. What is the area of one face?

- **A** 9 square cm
- **B** 54 square cm
- **C** 18 square cm
- **D** 3 square cm

Understand It with Pulse | Flag a mistake

4 A storage box is a cube of side 10 cm. How many faces does it have?

- **A** 6
- **B** 4
- **C** 8
- **D** 10

Understand It with Pulse | Flag a mistake

© 2026 Brett Robbins. All Rights Reserved.

5 A cereal box is a rectangular prism 2 cm by 3 cm by 4 cm. What is the area of the largest face?

- **A** 12 square cm
- **B** 6 square cm
- **C** 8 square cm
- **D** 24 square cm

Understand It with Pulse | Flag a mistake

6 A sugar cube has a surface area of 6 square cm. What is the length of one side?

- **A** 1 cm
- **B** 6 cm
- **C** 3 cm
- **D** 2 cm

Understand It with Pulse | Flag a mistake

© 2026 Brett Robbins. All Rights Reserved.

7 A toy block is a cube of side 5 cm. Its surface area is 150 square cm. How much bigger is that than the surface area of a cube of side 4 cm?

- **A** 54 square cm
- **B** 96 square cm
- **C** 150 square cm
- **D** 46 square cm

Understand It with Pulse | Flag a mistake

8 A gift box is a rectangular prism 3 cm by 2 cm by 2 cm. What is the area of the top and bottom faces together?

- **A** 12 square cm
- **B** 8 square cm
- **C** 6 square cm
- **D** 24 square cm

Understand It with Pulse | Flag a mistake

© 2026 Brett Robbins. All Rights Reserved.

9 A chocolate box is a rectangular prism 10 cm by 2 cm by 1 cm. Its surface area is 64 square cm. A second box is twice as long, 20 cm by 2 cm by 1 cm. What is the second box's surface area?

- **A** 124 square cm
- **B** 128 square cm
- **C** 64 square cm
- **D** 104 square cm

Understand It with Pulse | Flag a mistake

10 A pencil box is a rectangular prism 6 cm by 5 cm by 2 cm. A student adds only the three different faces once, 30 + 12 + 10 = 52, and stops. What did they forget?

- **A** To double each face, because opposite faces match
- **B** To add the bottom face
- **C** To multiply by 6
- **D** To use centimetres

Understand It with Pulse | Flag a mistake

© 2026 Brett Robbins. All Rights Reserved.

ANSWER KEY

1. 96 square cm

2. 108 square cm

3. 9 square cm

4. 6

5. 12 square cm

6. 1 cm

7. 54 square cm

8. 12 square cm

9. 124 square cm

10. To double each face, because opposite faces match

© 2026 Brett Robbins. All Rights Reserved.